VIKING®

TECHNICAL DATA

MICROMATIC® AND MicromaticHP® STANDARD RESPONSE UPRIGHT AND CONVENTIONAL SPRINKLERS

The Viking Corporation, 210 N Industrial Park Drive, Hastings MI 49058
Telephone: 269-945-9501 Technical Services: 877-384-5464 Fax: 269-818-1680 Email: techsvcs@vikingcorp.com

1. DESCRIPTION

Viking Micromatic® and MicromaticHP® Standard Response Upright and Conventional (Old Style) Sprinklers are small, thermosensitive, glass-bulb spray sprinklers available in several different finishes, temperature ratings, and K-Factors to meet design requirements. The special Polyester and Polytetrafluoroethylene (PTFE) coatings can be used in decorative applications where colors are desired. In addition, these coatings have been investigated for installation in corrosive atmospheres and are cULus listed as corrosion resistant as indicated in the Approval Chart. (Note: FM Global has no approval classification for PTFE and Polyester coatings as corrosion resistant.)

Viking standard response sprinklers may be ordered and/or used as open sprinklers (glass bulb and pip cap assembly removed) on deluge systems. Refer to Ordering Instructions on page 11r.

2. LISTINGS AND APPROVALS

cULus Listed: Category VNIV

FM Approved: Classes 2001, 2002, and 2016

NYC Approved: MEA 89-92-E, Volumes 3 and 12

ABS Certified: Certificate 04-HS407984B-PDA

VdS Approved: Certificates G4060055, G4980001, G4980003, G4980004, G4980006, and G4980008

LPC Approved: Ref. No. 096e/06

CE Certified: Standard EN 12259-1, EC-certificate of conformity 0832-CPD-2001, 0832-CPD-2003, 0786-CPD-40137, 0786-CPD-40142, 0786-CPD-40177, and 0786-CPD-40182

MED Certified: Standard EN 12259-1, EC-certificate of conformity 0832-MED-1003 and 0832-MED-1008

NOTE: Other International approval certificates are available upon request.

Refer to Approval Chart 1 and Design Criteria on pages 11t-u for cULus Listing requirements, and refer to Approval Chart 2 and Design Criteria on page 11v for FM Approval requirements that must be followed.

3. TECHNICAL DATA

Specifications:

Available since 1997.

Minimum Operating Pressure: 7 psi (0.5 bar)*

Maximum Working Pressure: Sprinklers VK021 and VK124 are rated for use with water working pressures ranging from the minimum 7 psi (0.5 bar) up to 250 psi (17 bar) for high-pressure systems. High-pressure (HP) sprinklers can be identified by locating "250" stamped on the deflector. All other Part Nos. not mentioned above are rated to a maximum 175 psi (12 bar) wwp.

Factory tested hydrostatically to 500 psi (34.5 bar)

Thread size: Refer to the Approval Charts

Nominal K-Factor: Refer to the Approval Charts

Glass-bulb fluid temperature rated to -65 °F (-55 °C)

Overall Length: Refer to the Approval Charts

Viking Technical Data may be found on The Viking Corporation's Web site at http://www.vikinggroupinc.com. The Web site may include a more recent edition of this Technical Data Page.

*cULus Listing, FM Approval, and NFPA 13 installs require a minimum of 7 psi (0.5 bar). The minimum operating pressure for LPCB and CE Approvals ONLY is 5 psi (0.35 bar).

Material Standards:

Frame Casting: Brass UNS-C84400 or QM Brass for Sprinklers 09993, 12986, 10227, and 10233. Brass UNS-C84400 for all other sprinklers.

Deflector: Brass UNS-C23000 or Copper UNS-C19500 for Sprinklers 12986 and 10193. Copper UNS-C19500 for Sprinklers 10141, 10169, 10174, 10220, and 10233. Brass UNS-C26000 for all other Sprinklers.

Replaces page 11q-v, dated July 27, 2011.(Revised main image and VK100 part number, removed brand name and replaced with PTFE)

The Viking Corporation, 210 N Industrial Park Drive, Hastings MI 49058
Telephone: 269-945-9501 Technical Services: 877-384-5464 Fax: 269-818-1680 Email: techsvcs@vikingcorp.com

Bushing (for Sprinklers 09995, 10191, 10192, 10218, and 10219): Brass UNS-C36000
Bulb: Glass, nominal 5 mm diameter
Belleville Spring Sealing Assembly: Nickel Alloy, coated on both sides with PTFE Tape
Screw: Brass UNS-C36000
Pip Cap for Sprinkler 09993: Brass UNS-C31400 or UNS-C31600. Pip Cap and Insert Assembly for all other Sprinklers: Copper UNS-C11000 and Stainless Steel UNS-S30400
Pip Cap Attachment (for Sprinklers 09995, 10192, and 10218): Brass UNS-C36000
For PTFE Coated Sprinklers: Belleville Spring-Exposed, Screw-Nickel Plated, Pip Cap-PTFE Coated
For Polyester Coated Sprinklers: Belleville Spring-Exposed

Ordering Information: (Also refer to the current Viking price list.)
Order Micromatic® and MicromaticHP® Standard Response Upright and Conventional Sprinklers by first adding the appropriate suffix for the sprinkler finish and then the appropriate suffix for the temperature rating to the sprinkler base part number.
Finish Suffix: Brass = A, Chrome-Enloy® = F, White Polyester = M-/W, Black Polyester = M-/B, and Black PTFE = N, Wax Coated = C, Wax Over Polyester = V-/W
Temperature Suffix (°F/°C): 135°/68° = A, 155°/68° = B, 175°/79° = D, 200°/93° = E, 212°/100° = M, 286°/141° = G, 360°/182° = H, 500°/260° = L, OPEN = Z (PTFE only).
For example, sprinkler VK100 with a 1/2" thread, Brass finish and a 155 °F/68 °C temperature rating = Part No. 12986AB

Available Finishes And Temperature Ratings: Refer to Table 1.

Accessories: (Also refer to the "Sprinkler Accessories" section of the Viking data book.)

Sprinkler Wrenches:
A. Standard Wrench: Part No. 10896W/B (available since 2000)
B. Wrench for wax-coated sprinklers: Part No. 13577W/B** (available since 2006)
**A ½" ratchet is required (not available from Viking).

Sprinkler Cabinets:
A. Six-head capacity: Part No. 01724A (available since 1971)
B. Twelve-head capacity: Part No. 01725A (available since 1971)

4. INSTALLATION

Refer to appropriate NFPA Installation Standards.

5. OPERATION

During fire conditions, the heat-sensitive liquid in the glass bulb expands, causing the glass to shatter, releasing the pip cap and sealing spring assembly. Water flowing through the sprinkler orifice strikes the sprinkler deflector, forming a uniform spray pattern to extinguish or control the fire.

6. INSPECTIONS, TESTS AND MAINTENANCE

Refer to NFPA 25 for Inspection, Testing and Maintenance requirements.

7. AVAILABILITY

The Viking Micromatic® and MicromaticHP® Standard Response Upright and Conventional Sprinklers are available through a network of domestic and international distributors. See The Viking Corporation web site for the closest distributor or contact The Viking Corporation.

8. GUARANTEE

For details of warranty, refer to Viking's current list price schedule or contact Viking directly.

VIKING®

TECHNICAL DATA

MICROMATIC® AND MicromaticHP® STANDARD RESPONSE UPRIGHT AND CONVENTIONAL SPRINKLERS

The Viking Corporation, 210 N Industrial Park Drive, Hastings MI 49058
Telephone: 269-945-9501 Technical Services: 877-384-5464 Fax: 269-818-1680 Email: techsvcs@vikingcorp.com

TABLE 1: AVAILABLE SPRINKLER TEMPERATURE RATINGS AND FINISHES

Sprinkler Temperature Classification	Sprinkler Nominal Temperature Rating[1]	Maximum Ambient Ceiling Temperature[2]	Bulb Color
Ordinary	135 °F (57 °C)	100 °F (38 °C)	Orange
Ordinary	155 °F (68 °C)	100 °F (38 °C)	Red
Intermediate	175 °F (79 °C)	150 °F (65 °C)	Yellow
Intermediate	200 °F (93 °C)	150 °F (65 °C)	Green
Intermediate	212 °F (100 °C)	150 °F (65 °C)	Green
High	286 °F (141 °C)	225 °F (107 °C)	Blue
Extra High	360 °F (182 °C)	300 °F (149 °C)	Mauve
Ultra High[3]	500 °F (260 °C)	465 °F (240 °C)	Black

Sprinkler Finishes: Brass, Chrome-Enloy®, White Polyester, Black Polyester, and Black PTFE

Corrosion-Resistant Coatings[4]: White Polyester, Black Polyester, and Black PTFE in all temperature ratings. Wax-Coated Brass and Wax over Polyester[5] for sprinklers with the following temperature ratings:

135 °F (57 °C) Off-White Wax — 155 °F (68 °C) Lt. Brown Wax — 175 °F (79 °C) Brown Wax
200 °F (93 °C) Brown Wax — 212 °F (100 °C) Dk. Brown Wax[6] — 286 °F (141 °C) Dk. Brown Wax[6]

Footnotes

[1] The sprinkler temperature rating is stamped on the deflector.

[2] Based on NFPA-13. Other limits may apply, depending on fire loading, sprinkler location, and other requirements of the Authority Having Jurisdiction. Refer to specific installation standards.

[3] Sprinklers of Ultra-High temperature rating are intended for use inside ovens, dryers, or similar enclosures with normal operating temperatures above 300 °F (149 °C). Where the ambient temperature around the Ultra-High temperature rated sprinkler is significantly reduced below 300 °F (149 °C), response time may be severely retarded.

[4] The corrosion-resistant coatings have passed the standard corrosion test required by the approving agencies indicated in the Approval Charts. These tests cannot and do not represent all possible corrosive environments. Prior to installation, verify through the end-user that the coatings are compatible with or suitable for the proposed environment. For automatic sprinklers, the coatings indicated are applied to the exposed exterior surfaces only. Note that the spring is exposed on sprinklers with Polyester and PTFE coatings. For PTFE coated open sprinklers only, the waterway is coated.

[5] Wax Over Polyester is unavailable for Sprinklers VK021 and VK124.

[6] Wax melting point is 170 °F (76 °C) for 212 °F (100 °C) and 286 °F (141 °C) temperature rated sprinklers.

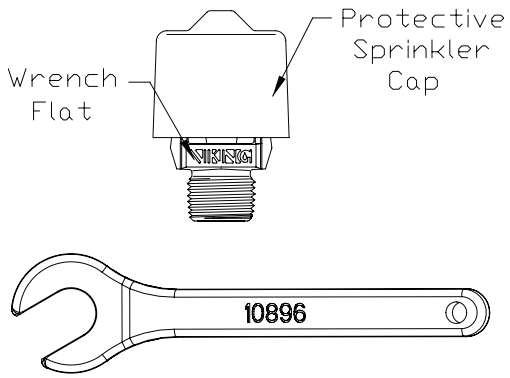

Figure 1:
Standard Sprinkler Wrench 10896W/B

VIKING®

TECHNICAL DATA

MICROMATIC® AND MicromaticHP® STANDARD RESPONSE UPRIGHT AND CONVENTIONAL SPRINKLERS

The Viking Corporation, 210 N Industrial Park Drive, Hastings MI 49058
Telephone: 269-945-9501 Technical Services: 877-384-5464 Fax: 269-818-1680 Email: techsvcs@vikingcorp.com

Approval Chart 1 (UL)

Micromatic® and MicromaticeHP® Standard Response Upright and Conventional Sprinklers
Maximum 175 PSI (12 bar) WWP

KEY: Temperature, Finish, Escutcheon (if applicable) — A1X

Base Part Number[1]	SIN	Thread Size		Nominal K-Factor		Overall Length		Listings and Approvals[3] (Refer also to Design Criteria on page 11u.)					
		NPT	BSP	U.S.	metric[2]	Inches	mm	cULus[4]	NYC[6]	VdS	LPCB	CE[12]	[13]
Upright-Standard Orifice													
12986	VK100	1/2”	15 mm	5.6	80.6	2-3/16	56	A1, B4, C5, D3	See Footnote 7.	--	--	--	--
10233	VK145	1/2”	15 mm	5.6	80.6	2-3/16	56	--	--	A2	A2, B4	A2	E2
10174	VK145	--	15 mm	5.6	80.6	2-3/16	56	--	--	A2	A2, B4	--	--
10193	VK100	--	15 mm	5.6	80.6	2-3/16	56	A1, B4, C5, D3	A1, B4, C5	--	--	--	--
Upright-Large Orifice													
10220	VK200	1/2”	15 mm	8.0	115.2	2-3/8	60	A1, B4, C5, D3	A1, B4	A2	--	E3	E3
10141	VK200	3/4”	20 mm	8.0	115.2	2-5/16	59	A1, B4, C5, D3	A1, B4, C5	A2	A2	E3	E3
10169	VK200	--	20 mm	8.0	115.2	2-5/16	59	A1, B4, C5, D3	--	A2	A2	E3	E3
Upright-Small Orifice[9]													
10218[10]	VK001	1/2”	15 mm	2.8	40.3	2-3/16	56	A1, B4, C5	See Footnote 7.	--	--	--	--
10219[10]	VK002	1/2”	15 mm	4.2	57	2-3/16	56	A1, B4, C5	See Footnote 7.	--	--	--	--
10191[10]	VK002	--	15 mm	4.2	57	2-3/16	56	A1, B4, C5	--	--	--	--	--
10192[10]	VK001	--	15 mm	2.8	40.3	2-3/16	56	A1, B4, C5	--	--	--	--	--
Conventional-Standard Orifice													
10227	VK118	1/2”	15 mm	5.6	80.6	2-3/16	56	A1, B4	A1, B4	A2	A2, B4	A2	E2
10172[11]	VK118	--	15 mm	5.6	80.6	2-3/16	56	A1, B4	--	--	A2, B4	--	--
Conventional-Large Orifice													
10228	VK120	3/4”	20 mm	8.0	115.2	2-5/16	59	A1, B4	A1, B4	A2	A2	E3	E2
10168[11]	VK120	--	20 mm	8.0	115.2	2-5/16	59	A1, B4	--	A2	A2	E3	E3
Maximum 250 PSI (17 bar) WWP Upright-Standard Orifice													
09993	VK124	1/2”	15 mm	5.6	80.6	2-1/4	58	A1, D3	See Footnote 7.	--	--	--	--
Upright-Small Orifice[9]													
09995[9]	VK021	1/2”	15 mm	2.8	40.3	2-1/4	58	A1	See Footnote 7.	--	--	--	--

Approved Temperature Ratings

A - 135 °F (57 °C), 155 °F (68 °C), 175 °F (79 °C), 200 °F (93 °C), 286 °F (141 °C), and 360 °F (182 °C)
B - 135 °F (57 °C), 155 °F (68 °C), 175 °F (79 °C), and 200 °F (93 °C)
C - 286 °F (141 °C)
D - 500 °F (260 °C)[8]
E - 155 °F (68 °C), 175 °F (79 °C), 200 °F (93 °C), 286 °F (141 °C), and 360 °F (182 °C)

Approved Finishes

1 - Brass, Chrome-Enloy®, White Polyester[5], Black Polyester[5], and Black PTFE[5]
2 - Brass, Chrome-Enloy®, White Polyester, and Black Polyester
3 - Brass and Chrome-Enloy®
4 - Wax-Coated Brass and Wax over Polyester[5]
5 - 200 °F (93 °C) High-Temperature Wax Coating (corrosion resistant); maximum ambient temperature allowed at ceiling = 150 °F (65 °C)

Footnotes

[1] Base part number is shown. For complete part number, refer to Viking’s current price schedule.
[2] Metric K-factor shown is for use when pressure is measured in bar. When pressure is measured in kPa, divide the metric K-factor shown by 10.0.
[3] This table shows the listings and approvals available at the time of printing. Check with the manufacturer for any additional approvals.
[4] Listed by Underwriters Laboratories Inc. for use in the U.S. and Canada.
[5] cULus Listed as corrosion resistant.
[6] Upright sprinklers Accepted for use, City of New York Department of Buildings, MEA Number 89-92-E, Vol. 12. Conventional sprinklers accepted for use, City of New York Department of Buildings, MEA Number 89-92-E, Vol. 3.
[7] Meets New York City requirements, effective July 1, 2008.
[8] Sprinklers of Ultra-High temperature rating are intended for use inside ovens, dryers, or similar enclosures with normal operating temperatures above 300 °F (149 °C). Where the ambient temperature around the Ultra-High temperature rated sprinkler is significantly reduced below 300 °F (149 °C), the response time of the Ultra-High temperature rated sprinkler may be severely retarded.
[9] Listings and Approvals limited to Light Hazard Occupancies where allowed by the installation standards being applied, with hydraulically calculated wet systems only. **Exception:** 4.2K sprinklers may be installed on hydraulically calculated dry pipe systems where piping is corrosion resistant or internally galvanized.
[10] The sprinkler orifice is bushed.
[11] Sprinklers 10168 and 10172 are available on special order.
[12] CE Certified, Standard EN 12259-1, EC-certificate of conformity 0786-CPD-40137, 0786-CPD-40142, 0786-CPD-40177, 0786-CPD-40182, 0832-CPD-2001, and 0832-CPD-2003.
[13] MED Certified, Standard EN 12259-1, EC-certificate of conformity 0832-MED-1003 and 0832-MED-1008.

VIKING®	TECHNICAL DATA	MICROMATIC® AND MicromaticHP® STANDARD RESPONSE UPRIGHT AND CONVENTIONAL SPRINKLERS

The Viking Corporation, 210 N Industrial Park Drive, Hastings MI 49058
Telephone: 269-945-9501 Technical Services: 877-384-5464 Fax: 269-818-1680 Email: techsvcs@vikingcorp.com

DESIGN CRITERIA - UL

(Also refer to Approval Chart 1 on page 11t)

cULus Listing Requirements:

Micromatic® and MicromaticHP® Standard Response Upright and Conventional Sprinklers are cULus Listed as indicated in the Approval Chart 1 for installation in accordance with the latest edition of NFPA 13 for standard spray sprinklers, or old style (conventional) sprinklers.

- Designed for use in Light, Ordinary, and Extra Hazard occupancies. *(Small orifice sprinklers are limited to Light Hazard where allowed by the installation standards being applied, with hydraulically calculated wet systems only. Exception: 4.2K sprinklers may be installed on hydraulically calculated dry pipe systems where piping is corrosion resistant or internally galvanized.)*
- The sprinkler installation rules contained in NFPA 13 for standard spray upright sprinklers must be followed. For conventional sprinklers, refer to the installation guidelines for old style (conventional) sprinklers.

IMPORTANT: Always refer to Bulletin Form No. F_091699 - Care and Handling of Sprinklers. Also refer to page SR1-3 for general care, installation, and maintenance information. Viking sprinklers are to be installed in accordance with the latest edition of Viking technical data, the appropriate standards of NFPA, LPCB, APSAD, VdS or other similar organizations, and also with the provisions of governmental codes, ordinances, and standards, whenever applicable.

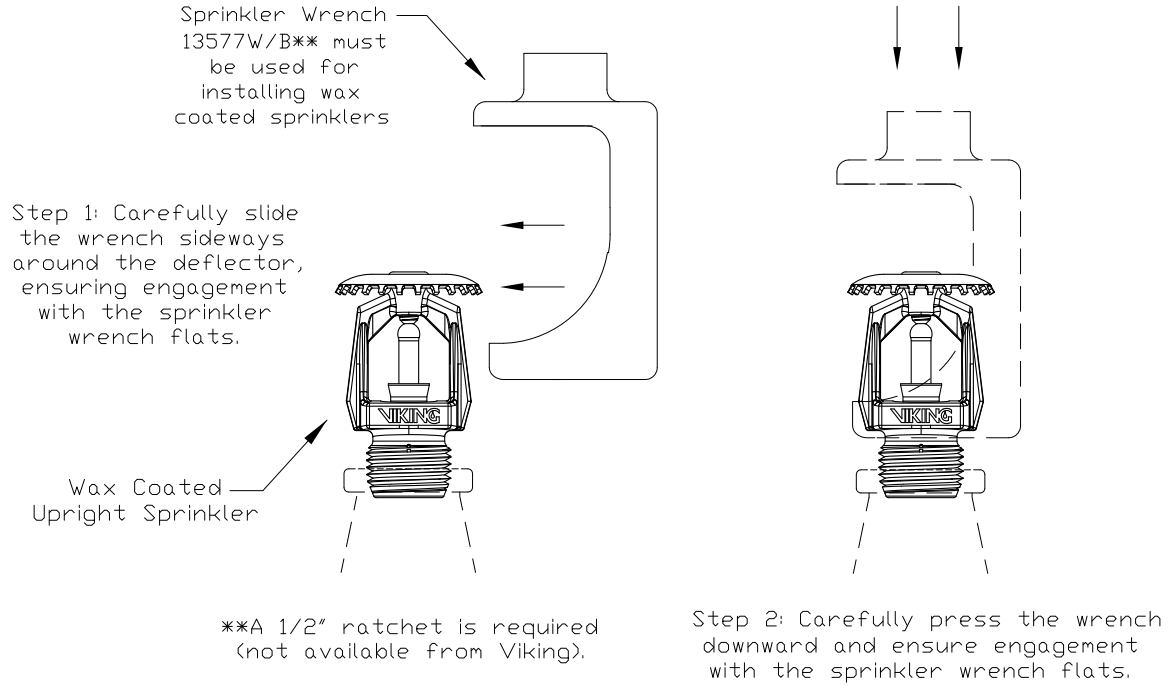

Figure 2: **Wrench 13577W/B for Wax Coated Sprinklers**

VIKING®

TECHNICAL DATA

MICROMATIC® AND MicromaticHP® STANDARD RESPONSE UPRIGHT AND CONVENTIONAL SPRINKLERS

The Viking Corporation, 210 N Industrial Park Drive, Hastings MI 49058
Telephone: 269-945-9501 Technical Services: 877-384-5464 Fax: 269-818-1680 Email: techsvcs@vikingcorp.com

Approval Chart 2 (FM)

Micromatic® Standard Response Upright Sprinklers
Maximum 175 PSI (12 bar) WWP

KEY: A1X — Temperature, Finish, Escutcheon (if applicable)

Base Part Number[1]	SIN	Thread Size		Nominal K-Factor		Overall Length		FM Approvals[3] (Refer also to Design Criteria below.)
		NPT	BSP	U.S.	metric[2]	Inches	mm	
Standard Orifice								
12986	VK100	1/2”	15 mm	5.6	80.6	2-3/16	56	A1, C5, E6, F1, G4
10233	VK145	1/2”	15 mm	5.6	80.6	2-3/16	56	A1, D2, E6, F1
10174	VK145	--	15 mm	5.6	80.6	2-3/16	56	A1, D2, F1
10193	VK100	--	15 mm	5.6	80.6	2-3/16	56	A1, D2, F1, G4
Large Orifice								
10220	VK200	1/2”	15 mm	8.0	115.2	2-3/8	60	B1, D5, F1
10141	VK200	3/4”	20 mm	8.0	115.2	2-5/16	59	B1, D5, F1
10169	VK200	--	20 mm	8.0	115.2	2-5/16	59	B1, D5, F1
Small Orifice[4]								
10218[6]	VK001	1/2”	15 mm	2.8	40.3	2-3/16	56	D3, D5
10192[6]	VK001	--	15 mm	2.8	40.3	2-3/16	56	D3, D5

Approved Temperature Ratings

A - 135 °F (57 °C), 155 °F (68 °C), 175 °F (79 °C), 200 °F (93 °C), 212 °F (100 °C), 286 °F (141 °C), and 360 °F (182 °C)
B - 135 °F (57 °C), 155 °F (68 °C), 175 °F (79 °C), 200 °F (93 °C), 286 °F (141 °C), and 360 °F (182 °C)
C - 135 °F (57 °C), 155 °F (68 °C), 175 °F (79 °C), 200 °F (93 °C), and 212 °F (100 °C)
D - 135 °F (57 °C), 155 °F (68 °C), 175 °F (79 °C), and 200 °F (93 °C)
E - 286 °F (141 °C)
F - 500 °F (260 °C)[5]
G - 155 °F (68 °C)

Approved Finishes

1 - Brass, Chrome-Enloy®, White Polyester, and Black Polyester
2 - White Polyester and Wax-Coated Brass (corrosion resistant)
3 - Brass and Chrome-Enloy®
4 - Wax-Coated Brass and Wax over Polyester
5 - Wax-Coated Brass (corrosion resistant)
6 - 200 °F (93 °C) High-Temperature Wax Coating (corrosion resistant); maximum ambient temperature allowed at ceiling = 150 °F (65 °C)

Footnotes

[1] Base part number is shown. For complete part number, refer to Viking’s current price schedule.
[2] Metric K-factor shown is for use when pressure is measured in bar. When pressure is measured in kPa, divide the metric K-factor shown by 10.0.
[3] This table shows the listings and approvals available at the time of printing. Check with the manufacturer for any additional approvals.
[4] FM Approved as standard response **Non-Storage** upright sprinklers. For specific application and installation requirements, reference the latest applicable FM Loss Prevention Data Sheets (including Data Sheet 2-0).
[5] Sprinklers of Ultra-High temperature rating are intended for use inside ovens, dryers, or similar enclosures with normal operating temperatures above 300 °F (149 °C). Where the ambient temperature around the Ultra-High temperature rated sprinkler is significantly reduced below 300 °F (149 °C), the response time of the Ultra-High temperature rated sprinkler may be severely retarded.
[6] The sprinkler orifice is bushed.

DESIGN CRITERIA - FM

(Also refer to Approval Chart 2 above.)

FM Approval Requirements:

The sprinklers indicated in Approval Chart 2 are FM Approved as standard response **Non-Storage** upright sprinklers as indicated in the FM Approval Guide. For specific application and installation requirements, reference the latest applicable FM Loss Prevention Data Sheets (including Data Sheet 2-0). FM Global Loss Prevention Data Sheets contain guidelines relating to, but not limited to: minimum water supply requirements, hydraulic design, ceiling slope and obstructions, minimum and maximum allowable spacing, and deflector distance below the ceiling.

NOTE: The FM installation guidelines may differ from cULus and/or NFPA criteria.

IMPORTANT: Always refer to Bulletin Form No. F_091699 - Care and Handling of Sprinklers. Also refer to page SR1-3 for general care, installation, and maintenance information. Viking sprinklers are to be installed in accordance with the latest edition of Viking technical data, the appropriate standards of NFPA, FM Global, LPCB, APSAD, VdS or other similar organizations, and also with the provisions of governmental codes, ordinances, and standards, whenever applicable.

Replaces page 11q-v, dated July 27, 2011.(Revised main image and VK100 part number, removed brand name and replaced with PTFE)